ЕКАТЕРИНБУРГ
КИП-Е
Телефон: +7 (343) 319-51-25
Телефон: +7 (343) 382-32-13
E-mail: info@kip-e.ru

Electronic differential pressure switch with display
Model A2G-45

Applications

- Electronic differential pressure switch for monitoring the differential pressure of air and other non-inflammable and non-aggressive gases
- Monitoring of air filters, blowers in ventilation ducts
- Control of air and fire shutters and for overpressure monitoring in clean rooms and laboratories

Special features

- Simple mounting
- Compact and robust design
- LCD display
- Simple setting of the switch point (relay output)
- Output signal 0 ... 10 V

Electronic differential pressure switch model A2G-45

Description

Design
Per 89/336/EEC electromagnetic compatibility and RoHS directive 2002/95/EC

Accuracy class
1.5 %

Measuring ranges
- Variant 1: -500 ... +500 Pa
  (-100 ... +100 Pa, -250 ... +250 Pa, -300 ... +300 Pa adjustable via jumpers) or
- Variant 2: 0 ... 2,500 Pa
  (0 ... +100 Pa, 0 ... +250 Pa, 0 ... +1,000 Pa adjustable via jumpers)

Maximum pressure
25 kPa

Permissible temperature
Ambient: -20 … +70 °C
Operation: -10 … +50 °C
(-5 … +50 °C with automatic zero adjustment)

Ingress protection
IP 54 per EN 60529 / IEC 529

Weight
150 g

Data sheets showing similar products:
Differential pressure switch, model A2G-40; see data sheet SP 69.02
Differential pressure transmitter, model A2G-50; see data sheet SP 69.03

WIKA
Part of your business

Standard version

Process connection
Copper alloy, for hoses with inner diameter 4 mm or 6 mm

Measuring element
Piezo measuring cell

Zero point adjustment
By pressing the "up" and "down" arrow keys simultaneously

Case/cover
Plastic (ABS)/plastic (PC)

Electrical connection
Cable gland M16 and M20
Screw terminals, max. 1.5 mm²

Output signal
0 … 10 V, 2-wire, load resistance min. 1 kOhm

Supply voltage
AC 24 V ±10 % or DC 21 ... 35 V

Current supply
35 mA + switch (7 mA each) + instrument with automatic zero adjustment (20 mA)
+ 0 … 10 V output (10 mA), max. 80 mA

Long-term stability
≤ ±8 Pa
≤ ±1 Pa with automatic zero adjustment (option)

Options

- Automatic zero adjustment
- Two switching outputs

Dimensions in mm

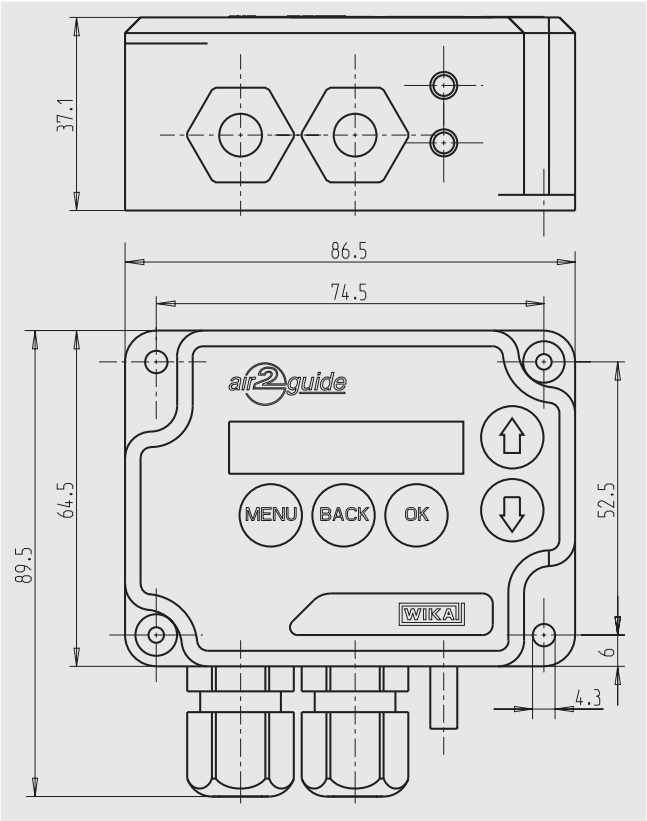

Connection diagram

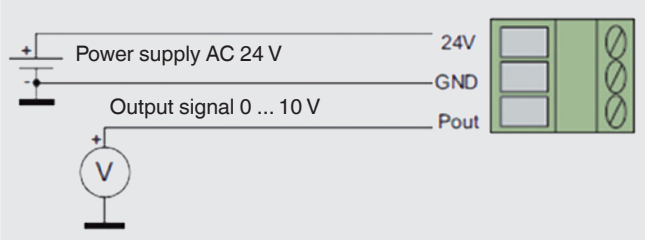

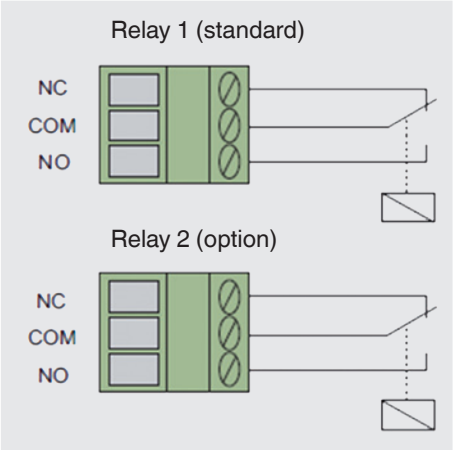

If the voltages being switched via the relays are not in accordance with SELV, then the power supply and signal/control cables of the relays should be installed so that they are separated. A separate cable entry is available for both.

Buttons for setting the individual functions

Key	Function
MENU	To access the menu, press the "MENU" button for approx. 3 seconds.
BACK	To exit the menu, press the "BACK" button.
OK	To open an individual menu point, and to accept the changes, press the "OK" button.
⇧ ⇩	These buttons enable you to scroll within the menu.

Menu selection and initialisation instructions for installation

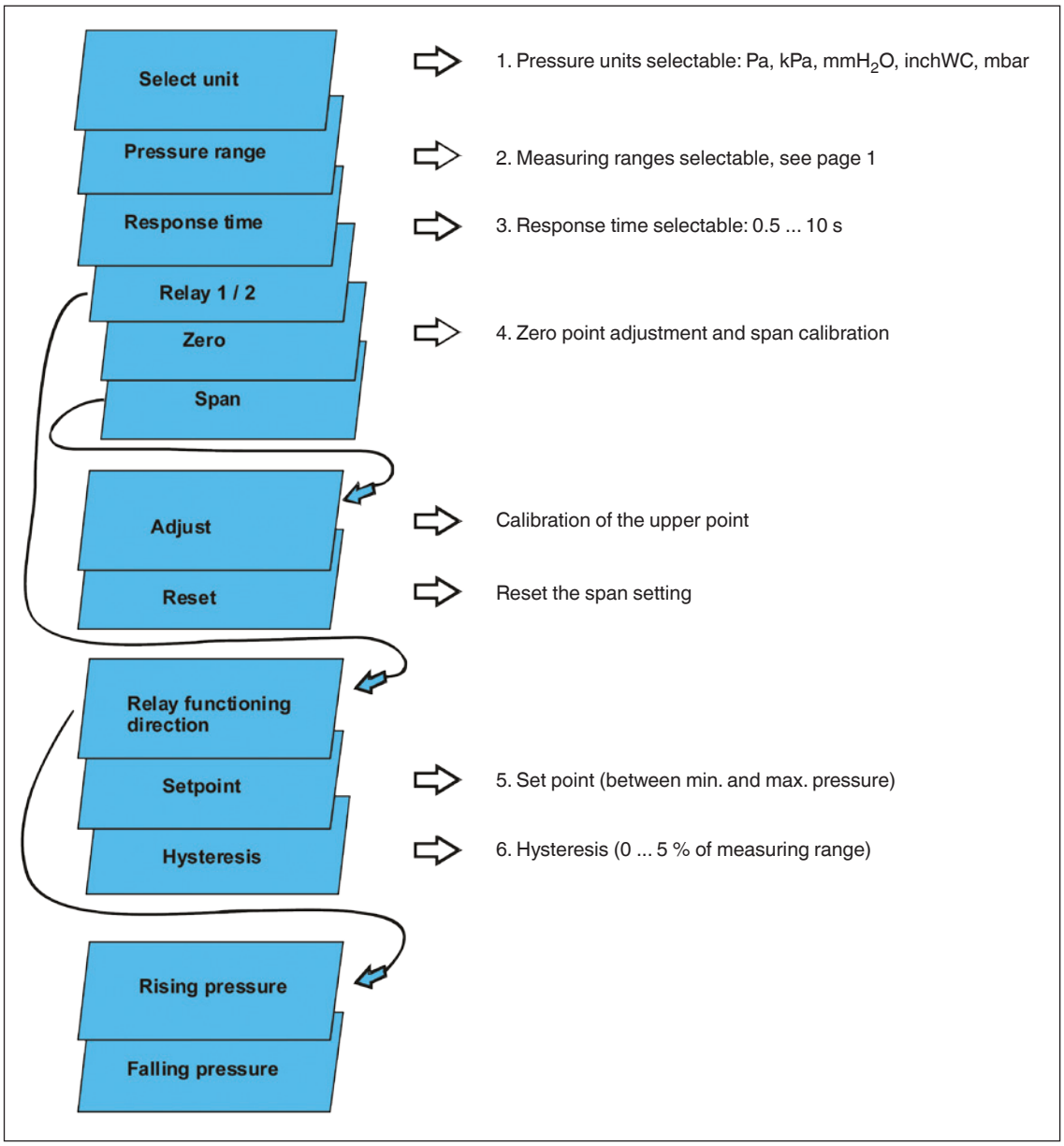

Zero point adjustment

Attention!
Connect the voltage supply one hour before making the zero point adjustment.

- Remove both hoses from the pressure connections ⊕ and ⊖.
- Press both the "up" and "down" buttons simultaneously, or select "Zero" in the setting menu:
  ⇒ the green LED switches off and "Zero" is shown in the display.
- Wait until the green LED switches back on, then reconnect the ⊕ and ⊖ pressure connections.

4. In normal operation, we recommend that a zero point adjustment is carried out every 12 months.

Span calibration

Attention!
Connect the voltage supply one hour before making the span calibration.

A reference pressure measuring instrument is needed for the span setting.

The span should not be set without pressure being present. If the span is set with either no test pressure, or too-low a pressure, the instrument will lose its accuracy and no longer give correct measured values.
If this should occur, select the menu point "Span" and then select "Reset", in order to reset the span setting.

Set the span in the following sequence:

1. Carry out a zero point calibration
2. Connect the pressure connections
3. Select "Span" in the menu and then select "Adjust"
4. Using both the "up" and "down" arrow buttons, set the relevant value for the display or the 0 … 10 V output, so that it matches the reference pressure instrument's value
5. Confirm the setting by pressing the "OK" button

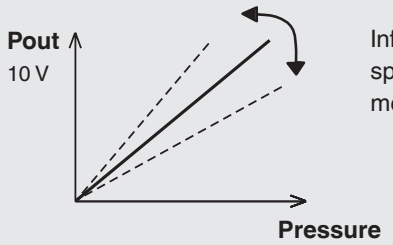

Influence of the span setting on the measured values

Ordering information
Model / Measuring range / Options

© 2012 WIKA Alexander Wiegand SE & Co. KG, all rights reserved.
The specifications given in this document represent the state of engineering at the time of publishing.
We reserve the right to make modifications to the specifications and materials.

WIKA Alexander Wiegand SE & Co. KG
Alexander-Wiegand-Straße 30
63911 Klingenberg/Germany
Tel. (+49) 9372/132-0
Fax (+49) 9372/132-406
E-mail info@wika.de
www.wika.de

04/2012 GB