Bourdon Tube Pressure Gauge

Bayonet Ring Case Stainless Steel with e-Gauge®

RCh / RChG
100/160–1/–3

Application

e-Gauge® is a revolutionary "Worldwide Patent Pending" sensor accessory for analogue dial instruments such as pressure gauges and thermometers.

By use of the latest absolute encoding inductance technique, e-Gauge® converts almost every gauge or thermometer into a switch and transmitter.

The e-Gauge® is a non-contact device and converts a „normal“ indicating gauge NCS 100/160 with 100 mm stainless steel bayonet ring DIN case into a multifunctional instrument with 2 digital limit switches and an analogue output signal of 4-20 mA.

New measuring principle
- non-contact device
- low moment of inertia, only a slight increased weight of the pointer by the electronic transponder
- no mechanical drag as in existing limit switches

Robustness and reliability
- no mechanical components and therefore no mechanical wear in the **e-Gauge®**
- tamper proof switch points - factory set

Technical Data e-Gauge®

Output signal
4...20 mA (3 wire)

Nominal rating
8...28 VDC, max. 50 mA, reverse polarity protection

Load impedence [Ω]
(UB-8 V) / 0.02 A

Accuracy of the output signal
± 1.0 % of full scale value

Repeatability
< ±0.2 % of full scale value

Resolution
12 bit

Temperature ranges for e-Gauge with pressure gauge

Storing temperature:	-40 °C...+70 °C (-40 °F...+158 °F)
	-20 °C...+70 °C (-4 °F...+158 °F) for glycerine filling
Ambient temperature:	-30 °C...+60 °C (-22 °F...+140 °F)
	-20 °C...+60 °C (-4 °F...+140 °F) for glycerine filling

Temperature influence
0.1% of full scale value / 10K
in design temperature range: 0...50 °C (32...122°F)

Switching outputs
2 NPN-outputs (Open Collector), short-circuit proof

Switching function
Opening or closing circuit
Please quote in order

Limit values
coloured marks at the limit values on the dial
breaking contact: red
making contact: green
Please quote in order
Both limit values of the e-Gauge® can be set at the same point.

Switching hysteresis
1% of span

Switching capacity
max. 28 VDC, max. 50 mA

Response time
0.1s default

Electrical connection
1.5 m cable, not insulated wire ends, 8xAWG24

EMC
EN 61326:2006

CE mark
The instruments are CE-marked

Electrical Connection

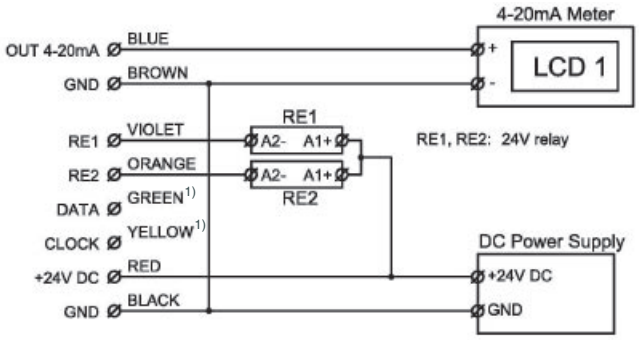

1) green / yellow (DATA & CLOCK) do not connect - factory use only.

See page 3 for technical details of the pressure gauge

Case Configurations, Code Letters, Dimensional Data and Weights, Blow-out Device

Bottom connection

Lower back connection

No mounting device

(no additional code letter)

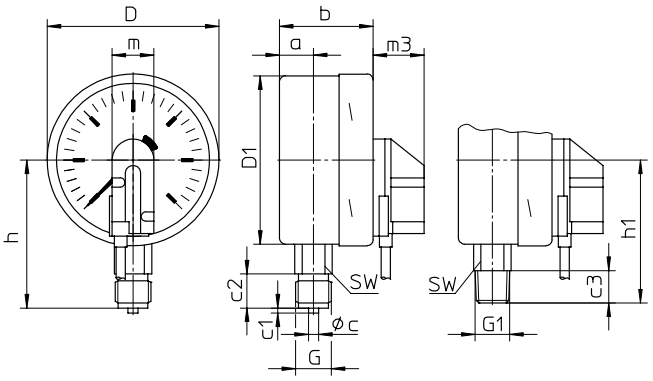

code letters: **r**

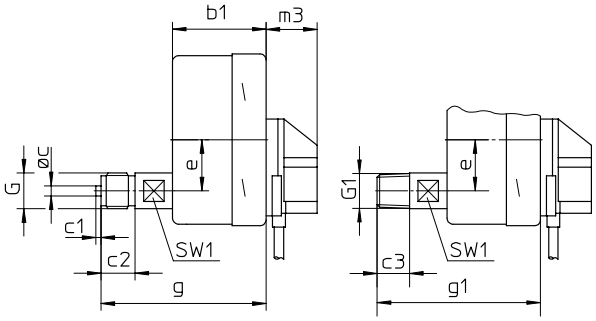

with mounting device

back flange for surface mounting
code letters: **Rh**

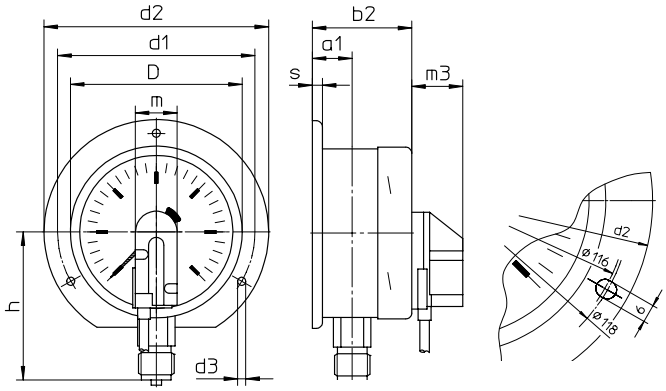

back flange for surface mounting
optional available with slotted
holes according to EN 837-1

back flange for surfache mounting
code letters: **rRh**

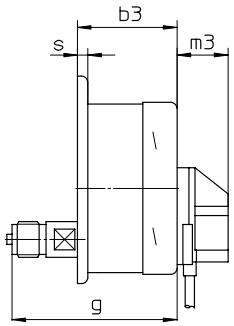

(available upon request, but according to
EN 837-1 not recommended)

Dimensional data (mm / inches) and weights (kg / lb)

NCS	a	a1	b	b1	b2	b3	c	c1	c2	c3	D	D1	d1	d2	d3	e	G	G1	g	g1	h±1	h1±1
100 **4"**	20 **.79**	23.5 **.93**	55 **2.17**	55 **2.17**	58.5 **2.3**	58.5 **2.3**	6 **.24**	3 **.12**	20 **.79**	19 **.75**	101 **3.98**	99 **3.9**	116 **4.57**	132 **5.2**	4.8 **.19**	30 **1.18**	G ½ B **½" BSP** M 20 x 1.5	½" NPT	97 **3.82**	96 **3.78**	87 **3.43**	84 **3.31**
160 **6"**	15 **.79**	18 **.71**	50 **1.97**	55 **2.17**	53 **2.09**	58 **2.28**	6 **.24**	3 **.12**	20 **.79**	19 **.75**	161 **6.34**	159 **6.26**	178 **7.01**	196 **7.72**	5.8 **.23**	30 **1.18**	G ½ B **½" BSP** M 20 x 1.5	½" NPT	92.5 **3.64**	91.5 **3.60**	115 **4.53**	114 **4.49**

m	m3	s	SW	SW1	approx. weight [1] RCh	RChG
24.5 **.96**	5.5 **.22**	6 **.24**	22 **.87**	17 **.67**	0.67 **1.47**	0.95 **2.2**
24.5 **.96**	30 **1.18**	6 **.24**	22 **.87**	17 **.67**	1.17 **2.58**	2.02 **4.45**

[1] Information for version without mounting device

Blow-out device

Blow-out screw fitting for model RChG 160
pressure range ≤ 1.6 bar Blow-out Verschraubung Nr.5
≥ 2.5 bar Blow-out Verschraubung Nr.3

Blow-out plug
Ø 1" (25 mm) for model RCh 100, 160
Ø 1½" (40 mm) for model RChG 100
with pressure equalizing
membrane

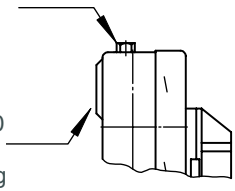

Standard Versions Bourdon Tube Pressure Gauge

Information on general and metrological features (load limits, temperature limitations) and standard pressure ranges / scale divisions of bourdon tube model RCh100/160 and RChG 100/160 can be found on general information leaflet 1000. Detailed descriptons can be found on data sheet 1201.

Technicel Data Bourdon Tube Pressure Gauge

Accuracy (EN 837-1)
Class 1.0

Case
Bayonet ring, 1.4301 (304 stainless steel)

Case Protection Type (EN 60 529 / IEC 529)
IP 54
IP 55 for model RChG

Blow-out Device

Model RCh	Blow-out plug in the back of the case, 1" (Ø 25mm)
Model RChG 100	Blow-out plug in the back of the case, 1½" (Ø 40mm)
Model RChG 160	Blow-out screw fitting at the top of the case

Case Ventilation
Model RChG 100 without ventilation, but with internal pressure compensation by pressure equalizing membrane. Model RChG 160 by blow-out screw fitting.

Case Filling
for model RCh**G**: glycerine

Nominal Case Size
100 (mm) (4"), 160 (mm) (6")

Wetted Parts

Type –3:	Connection:	1.4571 (316 stainless steel)
	Bourdon tube:	1.4571 (316 stainless steel), argon arc welding, ≤ 40 bar (600 psi) c-form, ≥ 60 bar (800 psi) helical, 1,600 bar (20,000 psi) NiFe-alloy, helical
Type –1:	Connection:	brass
	Bourdon tube:	≤ 40 bar (600 psi) = bronze, c-form, soft-soldered, ≥ 60 bar (800 psi) = 1.4571 (316 stainless steel), silver brazed, helical

Case Configuration

Connection:	screwed
Position of the connection:	bottom connection, optional lower back connection (r)
Mounting device:	without, optional back flange for surface mounting **(Rh)**, see page 2

Pressure Ranges (EN 837-1)
0-0.6 bar (0-10 psi) to 0-1,600 bar (0-20,000 psi) for type –3
0-0.6 bar (0-10 psi) to 0-1,000 bar (0-15,000 psi) for type –1

Process Connection
G ½ B (½" BSP)

Window
Polycarbonate (PC)

Movement

Stainless steel	for type –3
Brass / German silver	for type –1

Dial
Aluminum, black figures, white background

Pointer
Aluminum, black

Reference Temperature
+ 20°C (68 °F)

If the operating temperatures of the measuring system (measuring unit and movement) deviate from the reference temperature, additional deviations of the indication could occur. According to EN 837-1 these can be up to 0.4 % of the span per 10 K.

Safety Category according to EN 837-1
NCS 100: S1 pressure gauges with blow-out device

Options

see page 4

Accessory

Chemical seals: see catalogue-heading 7
Other accessory : see catalogue-heading 11

Options

Options: e-Gauge®

Marking of the switch points by coloured clips at the bayonet ring		*(order at the moment still as cleartext)*
Accuracy of the output signal ± 0.5% of full scale value		
Non linear scales, e. g. : flow measurement		
Output signal 20...4 mA		
Response time in 0.01s steps, from 0.01s to 20s		
Switching hysteresis deviating 1%, in 0.1% steps, from 0 to 25% of full scale value		
Deactivation of the switch points		
Programming provided by the customer		
e-Gauge calibrator, software CD and USB-cable	upon request	
for connection to the PC, preferably laptop (provided by the customer),		
voltage source 24 VDC (provided by the customer)		

Options: Pressure Gauge

Wetted parts model –6 connection and bourdon tube Monel 0-0.6 bar to 0-1000 bar movement stainless steel, argon arc welding ≤ 40 bar c-form, ≥ 60 bar helical, bottom connection, optional r		*(order at the moment still as cleartext)*
other process connections upon request, e. g. high pressure connection with external thread		
other pressure ranges and / or special scales, e. g. double scale bar/psi, coloured fields or areas, dial inscriptions, negative scales etc.		
version as refrigeration gauge with temperature scale		
receiver gauge 0.2-1 bar, scale 0-100%	linear	
	square	
indication accuracy grade 2A (± 0.5%) according to ASME B 40.1		
special alignment (reference points = odd values, e. g. 100 KN = 8.735 bar)		
movement	stainless steel for type –1 (for –3 and –6 standard)	
	silicone damped brass / polyacetal	
case ventilation no. 22 for outdoor installation		
case parts 316 L (1.4404) upon request		
case polished		
bayonet ring polished		
density examination of the elastic element	with helium-leak detection up to 10^{-9} mbar l/s for models –3 and –6	
wetted parts, free of grease and oil, up to 0-600 bar	adjustment ≤ 250 bar (3,000 psi) with dry air, ≥ 400 bar (5,000 psi) with distilled water, dial marking: symbol cancelled oil can	
oxygen version, up to 0-600 bar[1]	free of grease and oil, additional restrictor screw in the inlet port, orifice Ø 0.3 mm, dial inscription: oxygen no version according to EN 837-1[2]	
silicone-free version		
Position of the connection radial at 3:00, 9:00, 12:00 (others upon request) or position of installation deviating from vertical (90°)		
restrictor screw in the inlet port material: as process connection brass, stainless steel or Monel	orifice Ø 0.8 mm (0.03")	
	orifice Ø 0.6 mm (not Monel) (0.02")	
	orifice Ø 0.3 mm (not Monel) (0.01")	
measuring point marking	stainless steel-plate 12 mm x 55 mm (0.47" x 2.17"), wire mounting	
	or sticker on case coverage	
Deflagration volume-protection Adapt FS	version 5 according to DS 11001	
GOST-version for Russia, Ukraine, Kazakhstan		

Ordering Information (model construction)

Please quote in your order:	basic model pressure gauge	e.g. RChG 160-1, Rh, 0-6 bar, G ½ B	
		switching function	e. g. eG 12
		limit values	1. limit value 1.5 bar
			2. limit value 4.0 bar
	pressure gauge with e-gauge®	e.g. RChG 160-1, Rh, 0-6 bar, G ½ B	eG 12

If you desire options, please quote these in the cleartext

[1] for instruments without case filling
[2] EN 837-1 in connection with oxygen-version requires safety category S3

Technical changes, replacement of materials and errors excepted